Delpro

Moisture Conditioners

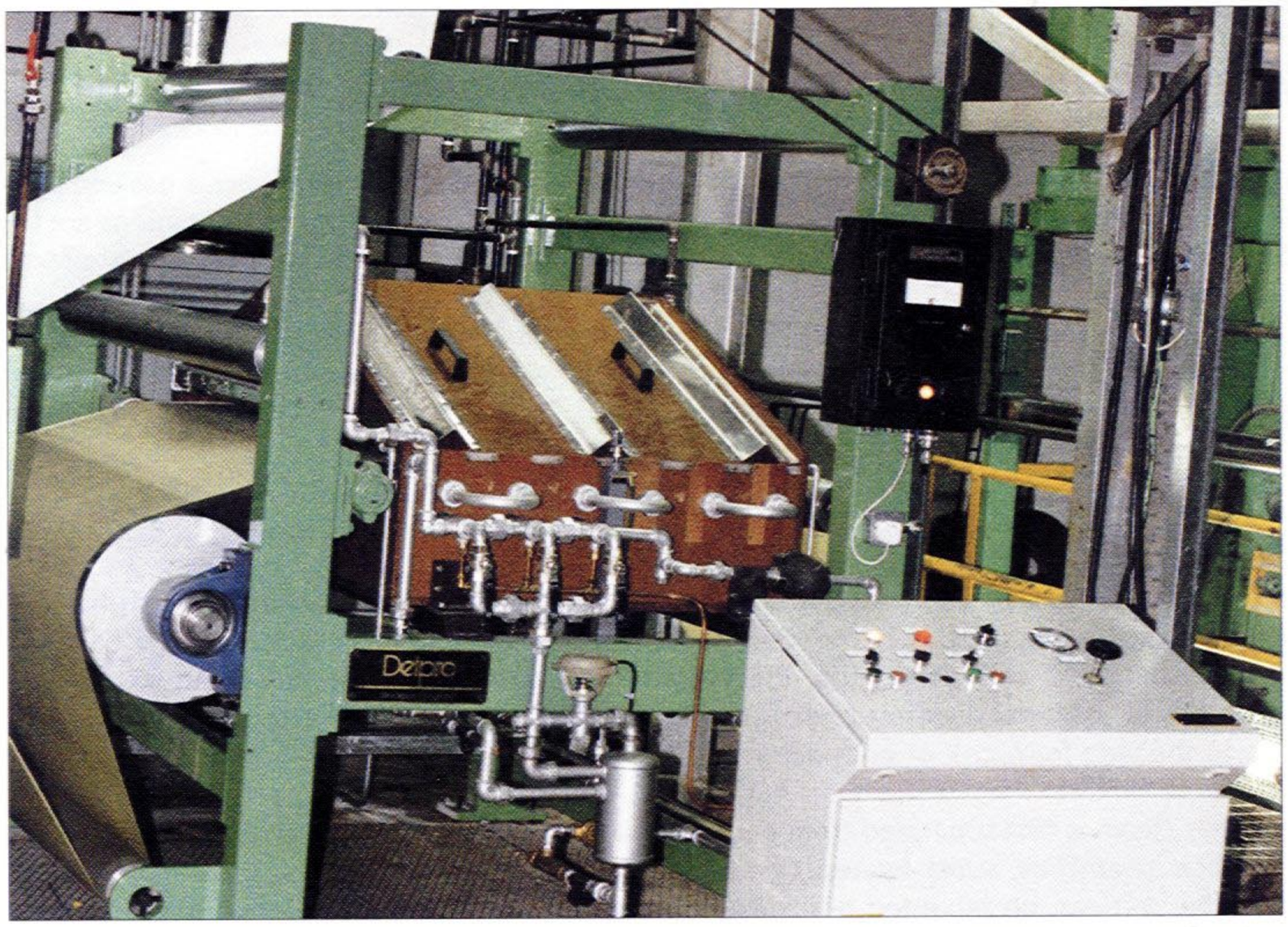

Delpro Conditioners improve the quality of your end product adding moisture and controlling curl in coated or uncoated papers and boards.

Assured Moisture Addition — *Up to 4% moisture can be added at speeds up to 300m/min within + or – 0.2% by weight.*

Fully Assembled & Piped — *Comprising, a dry steam conditioner with infra red moisture meter, automatic moisture control, web cooling, spreading and guiding units.*

Product Versatility — *A wide range of substance weights and finishes can be upgraded.*

Customer Designed — *Conditioners can be supplied for either new or existing printing, paper making, coating and laminating machines or as self-contained, "stand alone" units.*

engineers & designers to the converting industries

Applications

Overdrying of paper by hot air to dry coatings based on water or solvents, with possible high temperature curing requirements, often results in reduced moisture content with subsequent instability and curl giving rise to downstream converting dificulties and wastage.

A typical example is siliconised paper where high curing temperatures will reduce the moisture content down to 1-2%. Further opportunities arise if the process involves lamination to a cold web having a normal moisture content of 5-6%. The resulting differential expansion between the two webs will result in a totally unacceptable product due to curls and cockles as the overdried web slowly expands to ambient conditions.

An equally rewarding field is the correction of curl - the bug-bear of silk-screen and flat-bed printers - on one side coated papers, such as fluorescent or gummed.

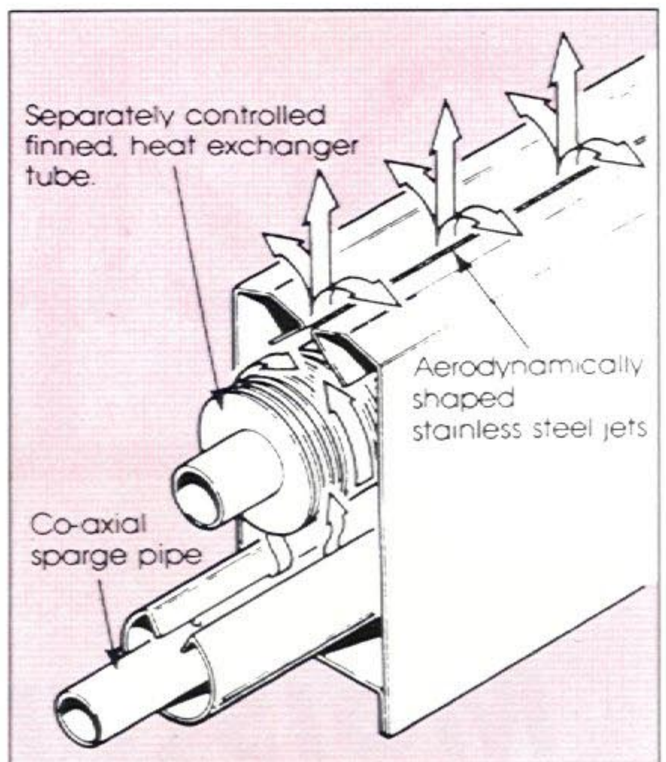

Internal view of steam jet.

No need for reverse side coating Just a Delpro Conditioner in line with the coater.

The advantage of dry, super-heated steam is that unlike water wetting systems or raw steam, it remains a gas and penetrates the internal paper fibres without wetting the surface. This can be critical where sensitive substrates or coatings are involved. An example is gummed stamp paper where the steam is able to pass through the coating without it being affected.

The dry steam molecules then condense within the web, raising it's moisture content and incidentally it's temperature. Hence, the need for the cooling roll provided at the exit to the conditioner. It also follows that the lower the web temperature before it enters the conditioner chamber, the greater the possible moisture uptake. Thus cooling of the web before conditioning is essential if a high moisture uptake is required.

Design & Installation

An insulated chamber of 20mm thick Tufnol side panels and pneumatically operated access panels of foam filled stainless steel are angled to prevent condensate dropping on to the web. Heated condensate gutters collect any run off at the vertical ends. Depending on substrate thickness and web speed, the chamber will contain between two and six independently controlled, stainless steel jet orifice assemblies corresponding to the web width, from which a controlled volume of super heated steam impinges on to the web from one or both sides, according to the application.

Ordinary factory mains services steam is first separated from entrained water droplets, then pressure reduced and finally, as it emerges from the jet orifice assemblies, super-heated by passage through heat exchangers, separately controlled, as illustrated in the diagram. The unit can be mounted horizontally or vertically and is supplied complete with supporting framework and DC drive to the cooling roll, custom designed to each application. Moisture content in the conditioned web can be controlled manually or measured by an infra-red continuously recording moisture meter and controlled within the range generally 2-10% moisture content by a PID feed-back loop to the jet orifice assemblies, all forming the total package offered.

Delpro LIMITED

Engineers & designers to the converting industries

Peakdale Rd, Brookfield Industrial Estate,
Glossop, Derbyshire SK13 9XE
Tel: 01457 862776 Fax: 01457 862433

Illustrations and descriptions are typical but not specific and maybe changed without notice as a result of continuous development.

Performance is typical of that already achieved but will depend upon materials and applications and is not warranted.

COATERS LAMINATORS DRYERS CONDITIONERS
FULLY AUTOMATED REEL STANDS ZERO SPEED SPLICERS
LIQUID HANDLING SYSTEMS CUSTOM DESIGNED MACHINE REBUILDS & RETROFITS
TURN-KEY COATING & LAMINATING PRODUCTION LINES